# ELITE 750 BASIC UNIVERSAL WIRING HARNESS #HT-140602

Haltech ENGINE MANAGEMENT SYSTEMS

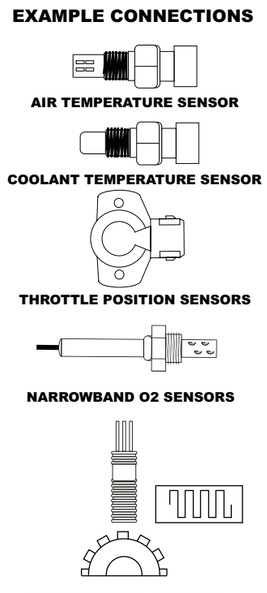


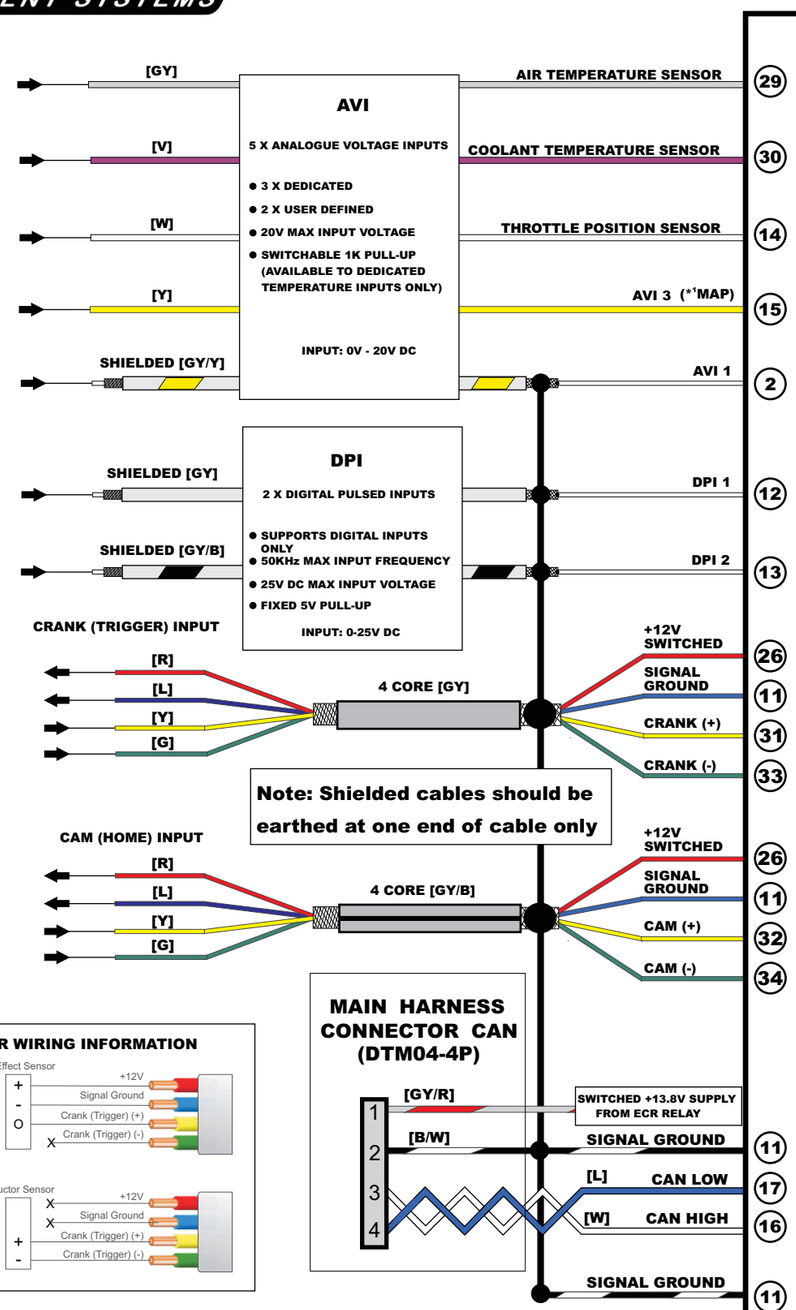


Note: Shielded cables should be earthed at one end of cable only

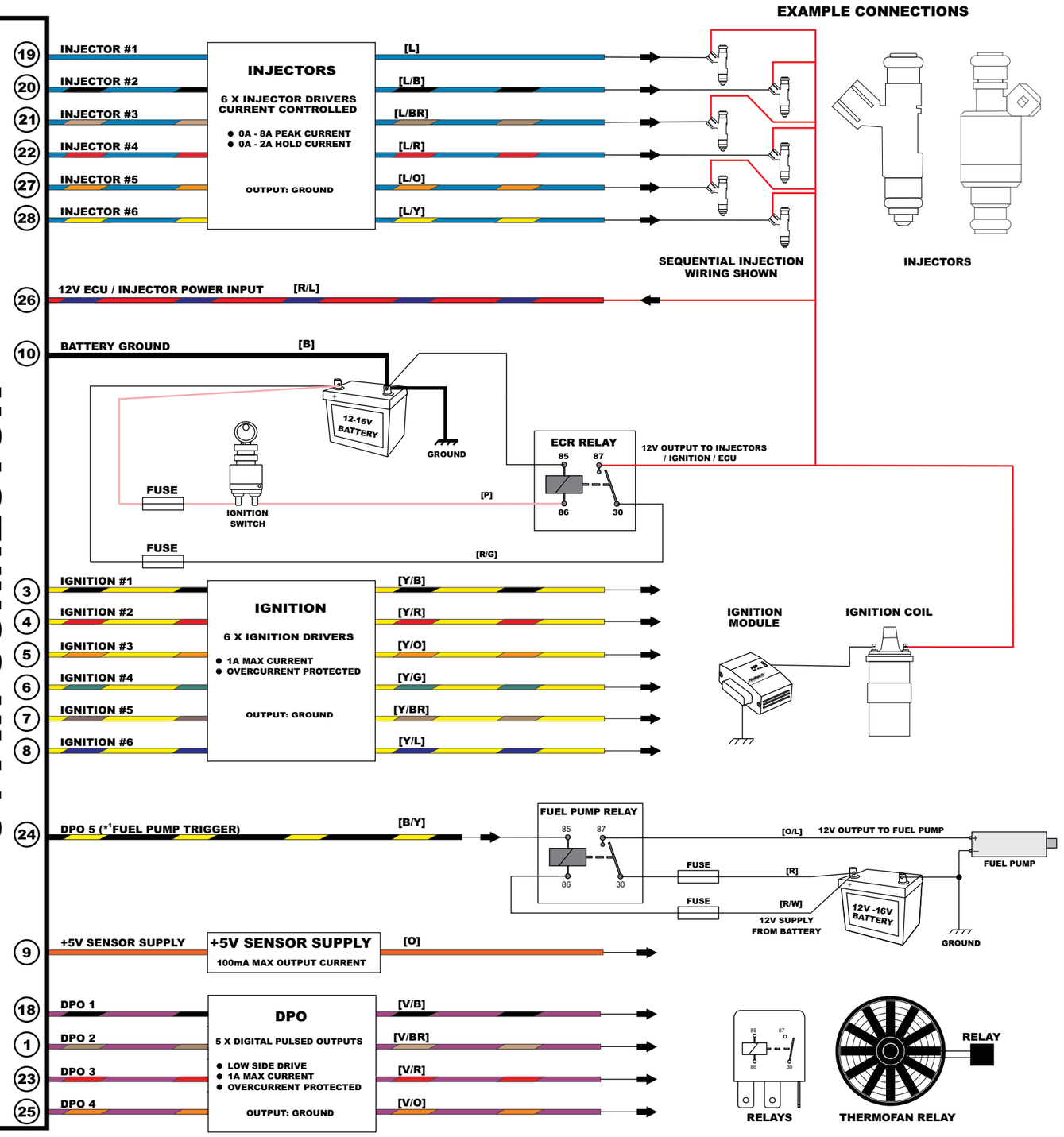


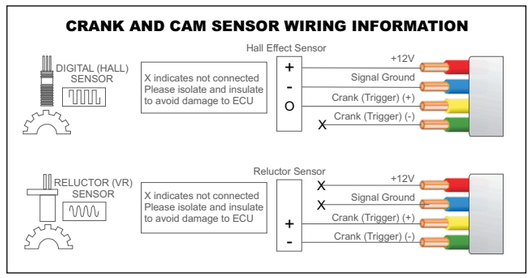





## LOOKING INTO CONNECTOR ON ECU

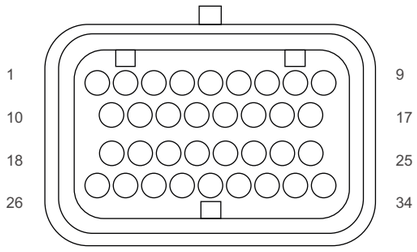


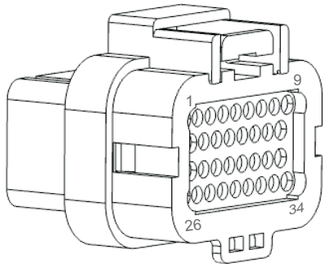


**LEGEND - WIRE COLOUR**

B = BLACK BR = BROWN G = GREEN GY = GREY L = BLUE
O = ORANGE P = PINK R = RED V = VIOLET Y = YELLOW W = WHITE
WHEN TWO COLOURS ARE USED IN A WIRE BY THE ALPHABETICAL CODE,
THE FIRST LETTER INDICATES THE BASIC WIRE COLOUR,
THE SECOND COLOUR INDICATES THE COLOUR OF THE STRIPE.

**NOTES:**

*1RECOMMENDED FUNCTION ALLOCATION, BUT NOT LIMITED TO

| | |
|---|---|
| Haltech ENGINE MANAGEMENT SYSTEMS | ELITE 750 (2.6M) BASIC UNIVERSAL HARNESS #HT-140602 |
| HALTECH ENGINE MANAGEMENT SYSTEMS | |
| DOCUMENT REVISION: 2 | HARNESS REVISION: 1.1 |
| DATE: 7TH MARCH 2016 | SHEET 1 OF 1 |